MFP-UHD / MFP-UHD2

2235905 A1-02.2022

A

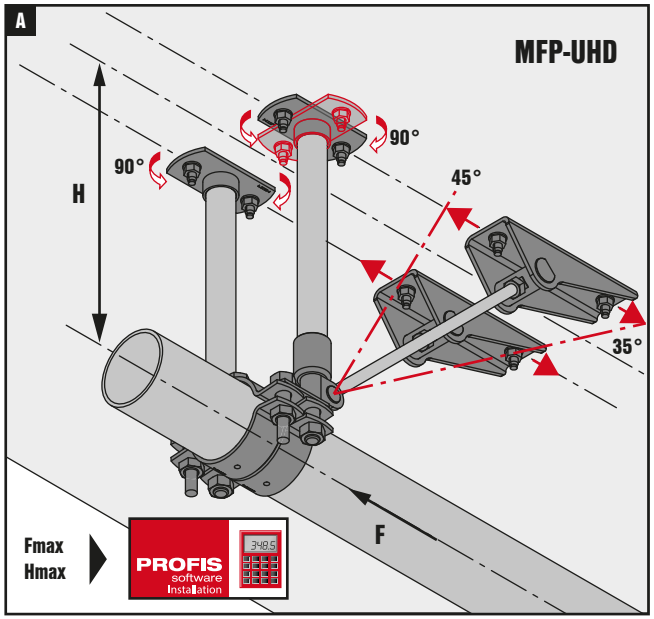

2x Set # 2222965

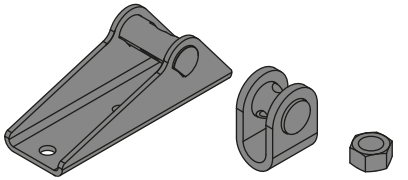

2x MFP-PC
73-78 to 318-326

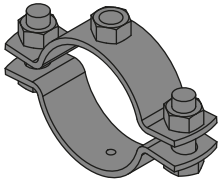

1x Set # 2238265

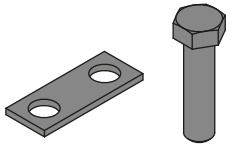

2x AM-M16 4.8

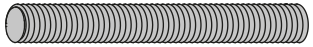

2x Set # 2222963

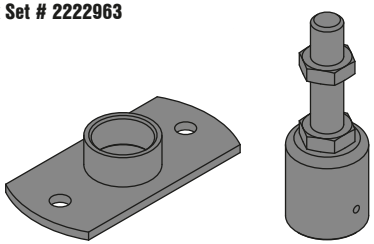

4x HST3-M12 x 85
2113978 /
HUS3-H 10 x 90
2079914
HUS4-H 10 x 90
2293555

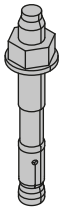

4x HST3-M16 x 135
2105858 /
HUS3-H 14 x 130
2079923
HUS4-H 14 x 130
2293571

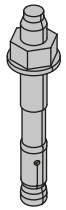

2x GR-G 1 1/4"

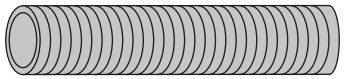

B

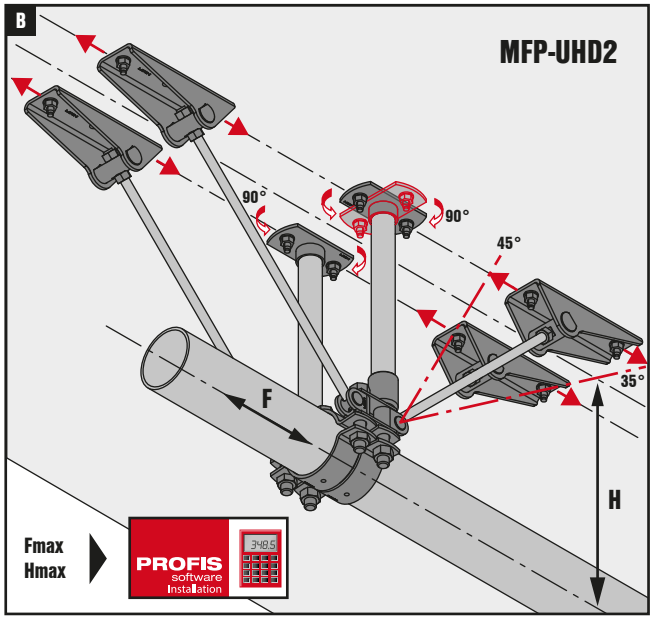

4x Set # 2222965

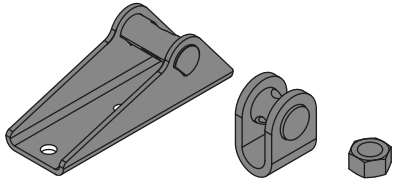

2x MFP-PC
73-78 to 318-326

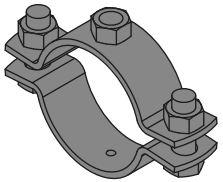

2x Set # 2238265

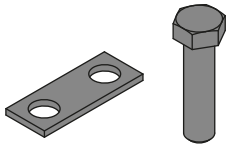

4x AM-M16 4.8

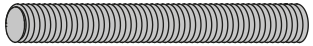

2x Set # 2222963

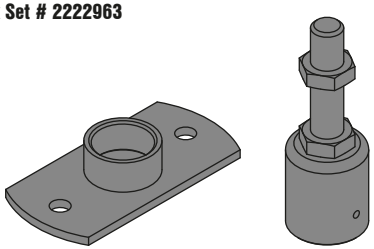

4x HST3-M12 x 85
2113978 /
HUS3-H 10 x 90
2079914
HUS4-H 10 x 90
2293555

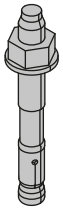

8x HST3-M16 x 135
2105858 /
HUS3-H 14 x 130
2079923
HUS4-H 14 x 130
2293571

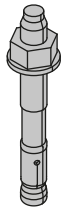

2x GR-G 1 1/4"

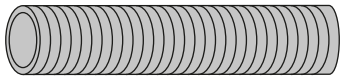

MFP-UHD / MFP-UHD2

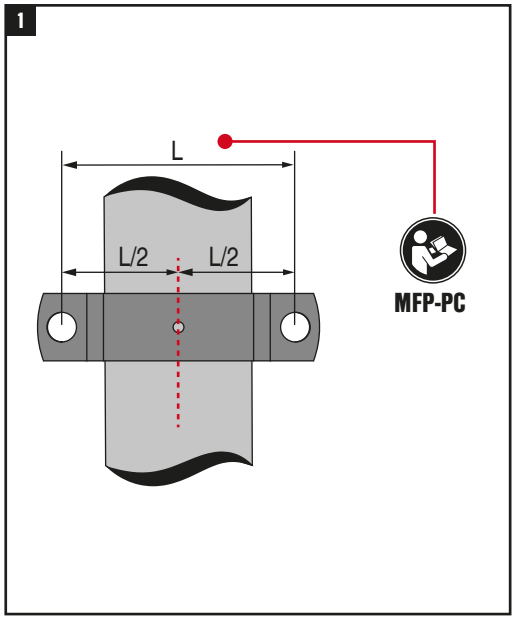

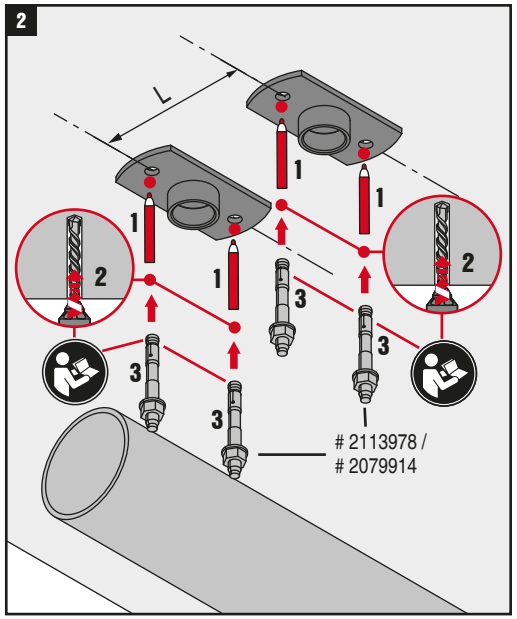

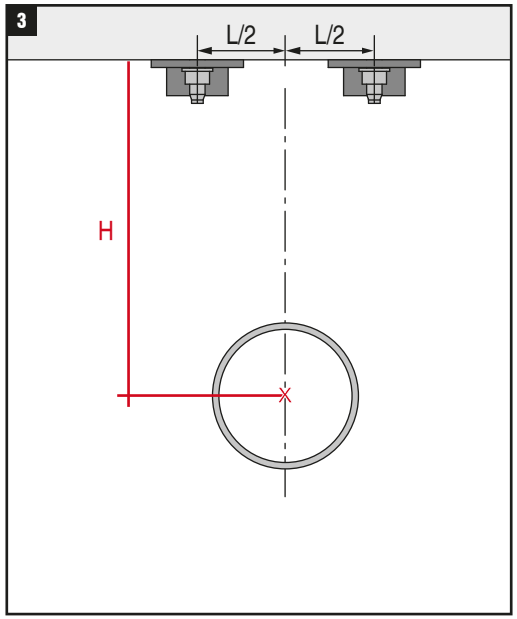

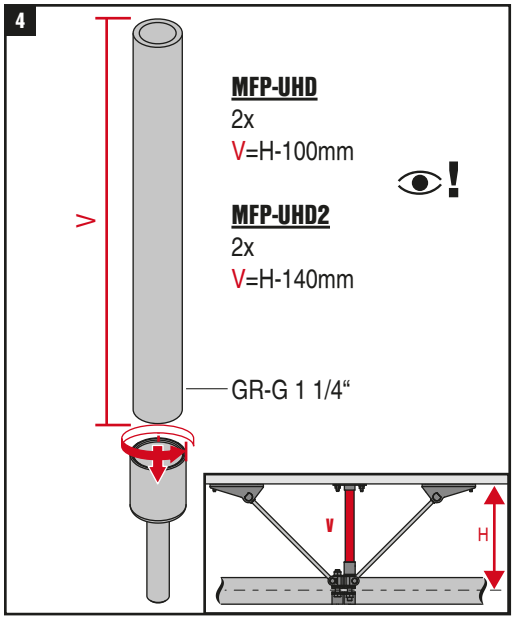

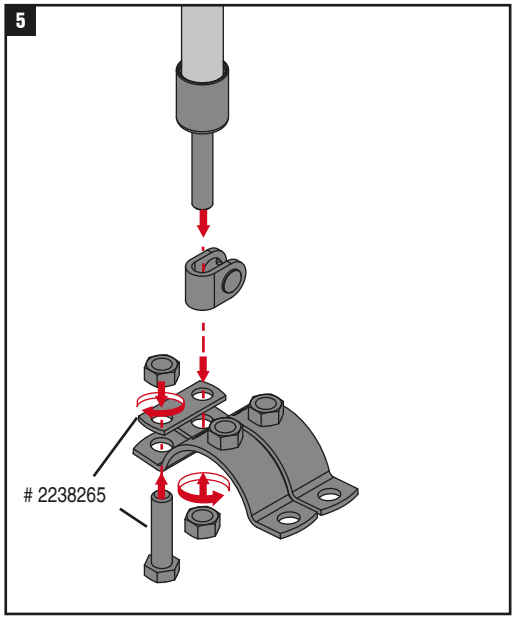

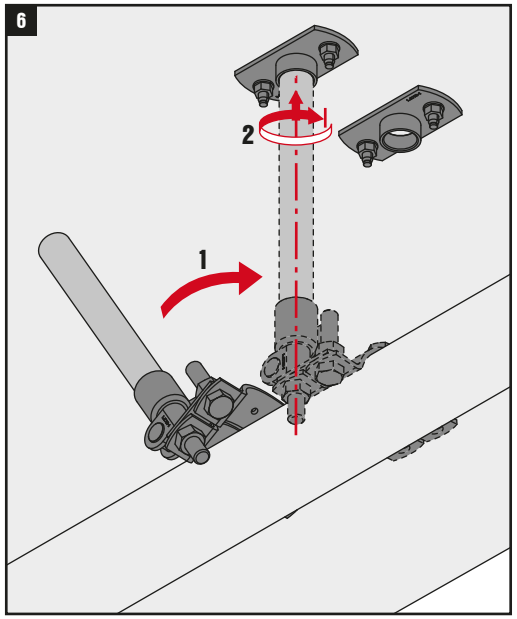

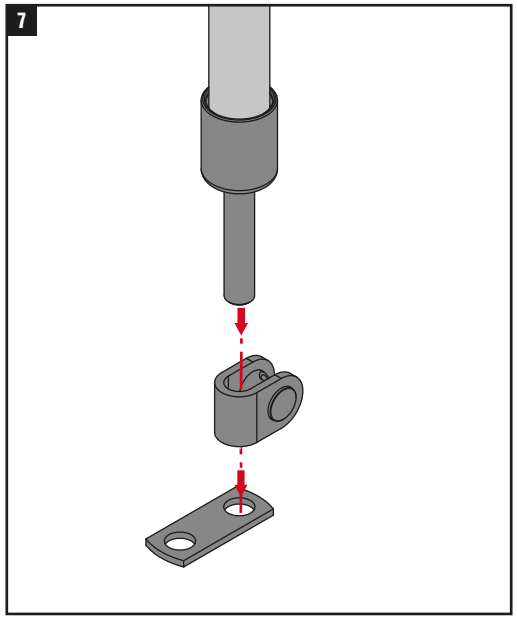

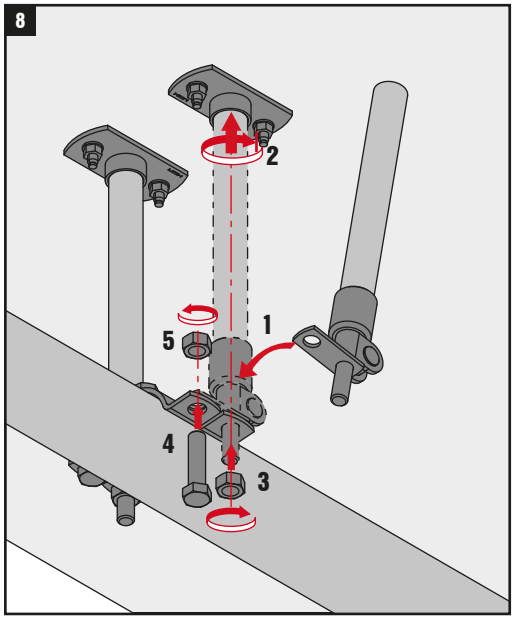

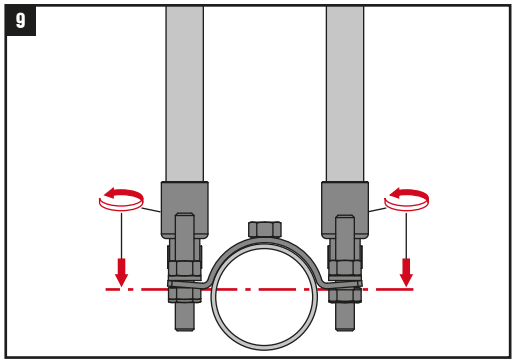
9

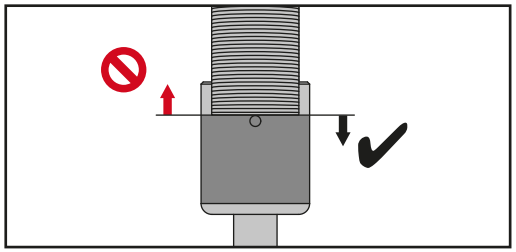

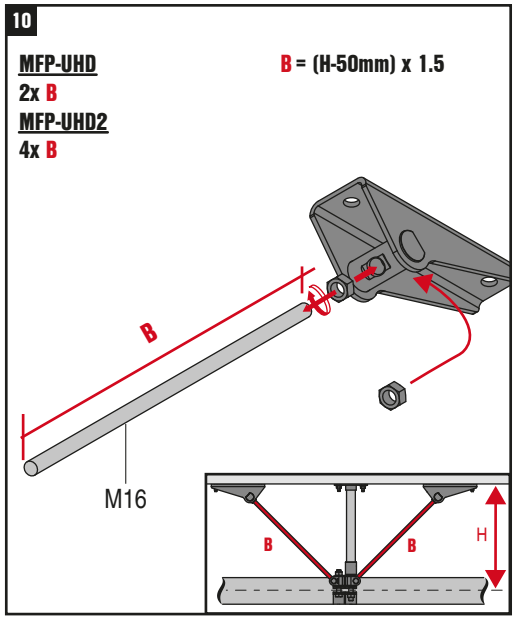
10
MFP-UHD
2x B
MFP-UHD2
4x B
B = (H-50mm) x 1.5
B
M16
B
B
H

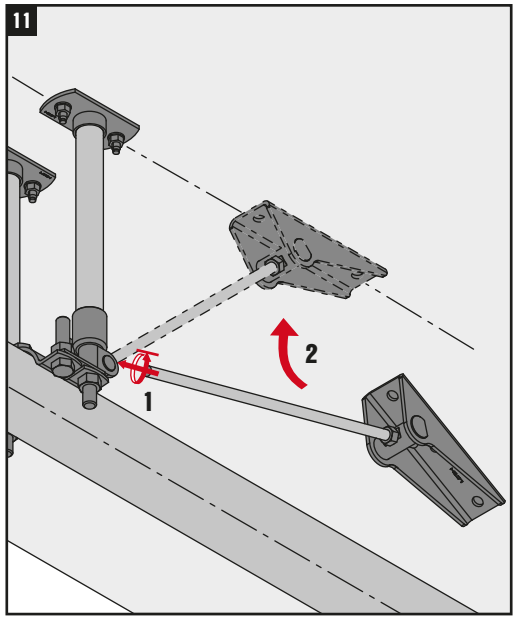
11
1
2

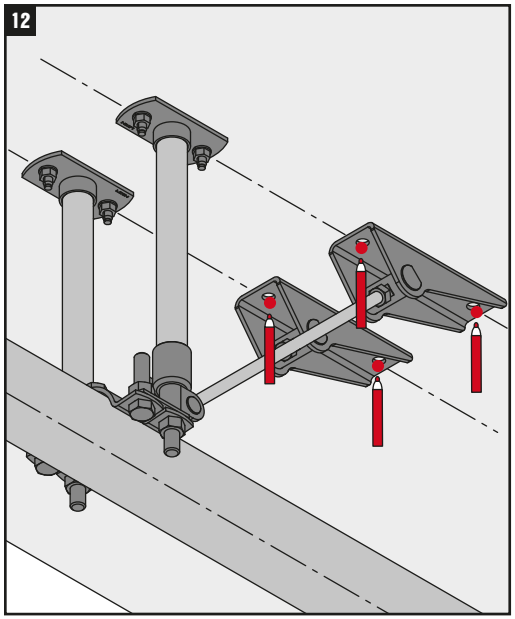
12

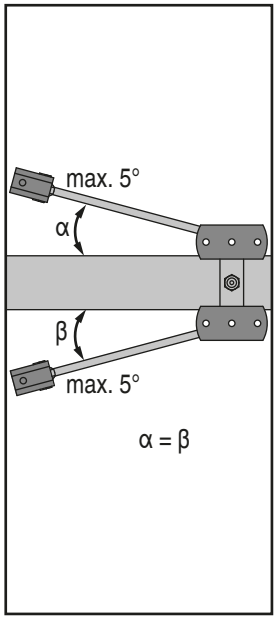
max. 5°
α
β
max. 5°
α = β

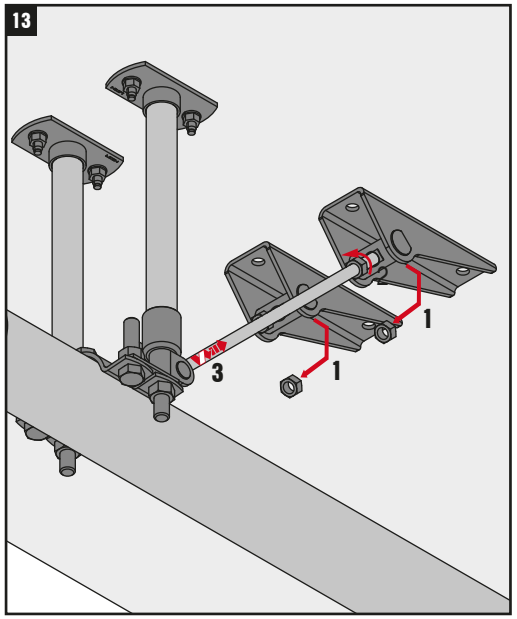
13
1
1
3

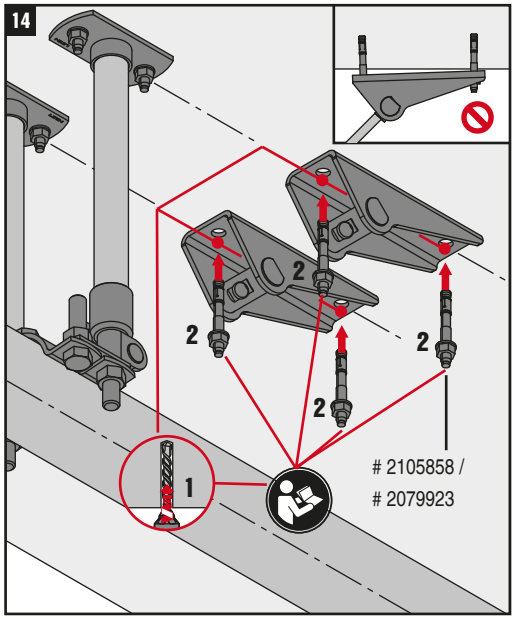
14
2
2
2
2
1
2105858 /
2079923

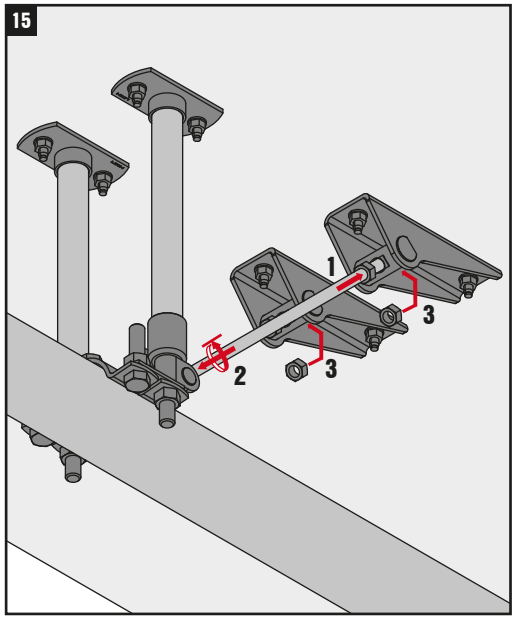
15
1
2
3
3

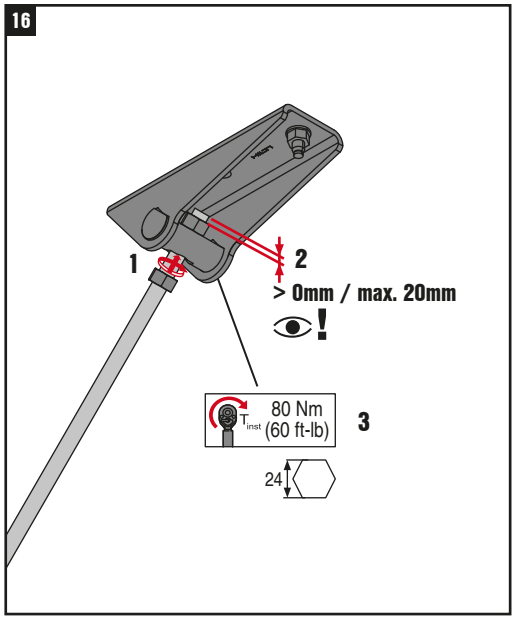

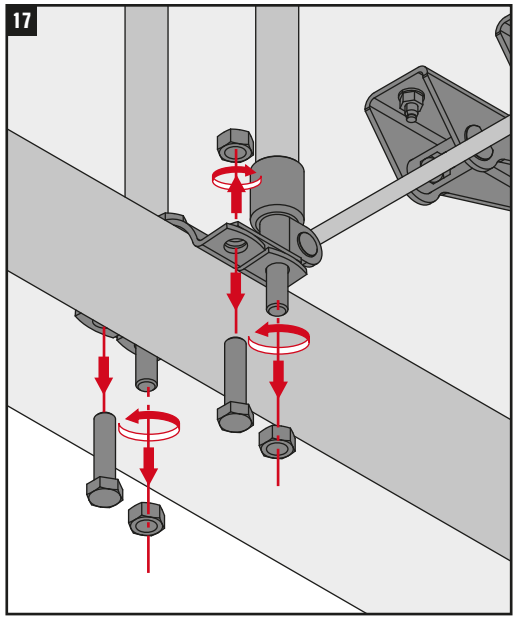

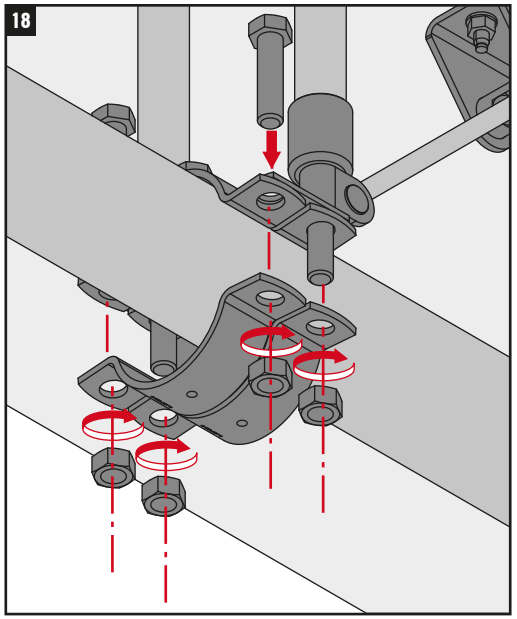

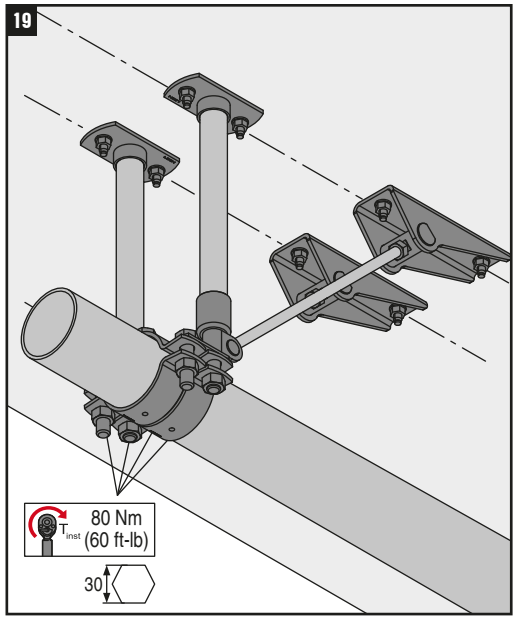

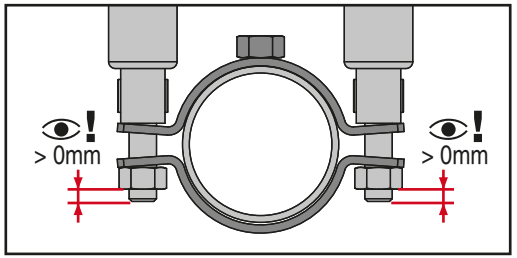

F > 14 kN

PROFIS software Installation